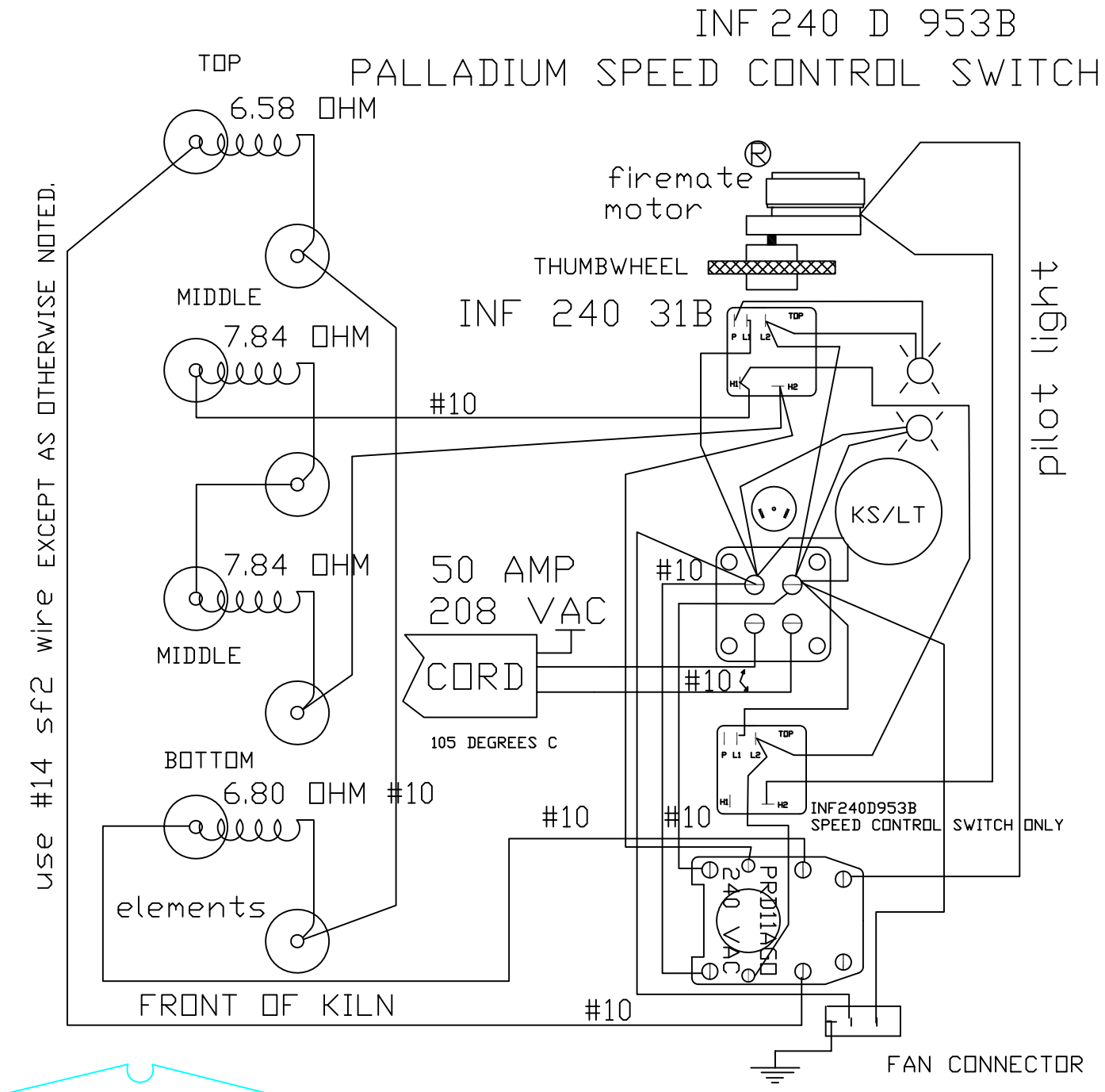

CRESS

FX23F,FTX23F 208 VAC 29 AMPS