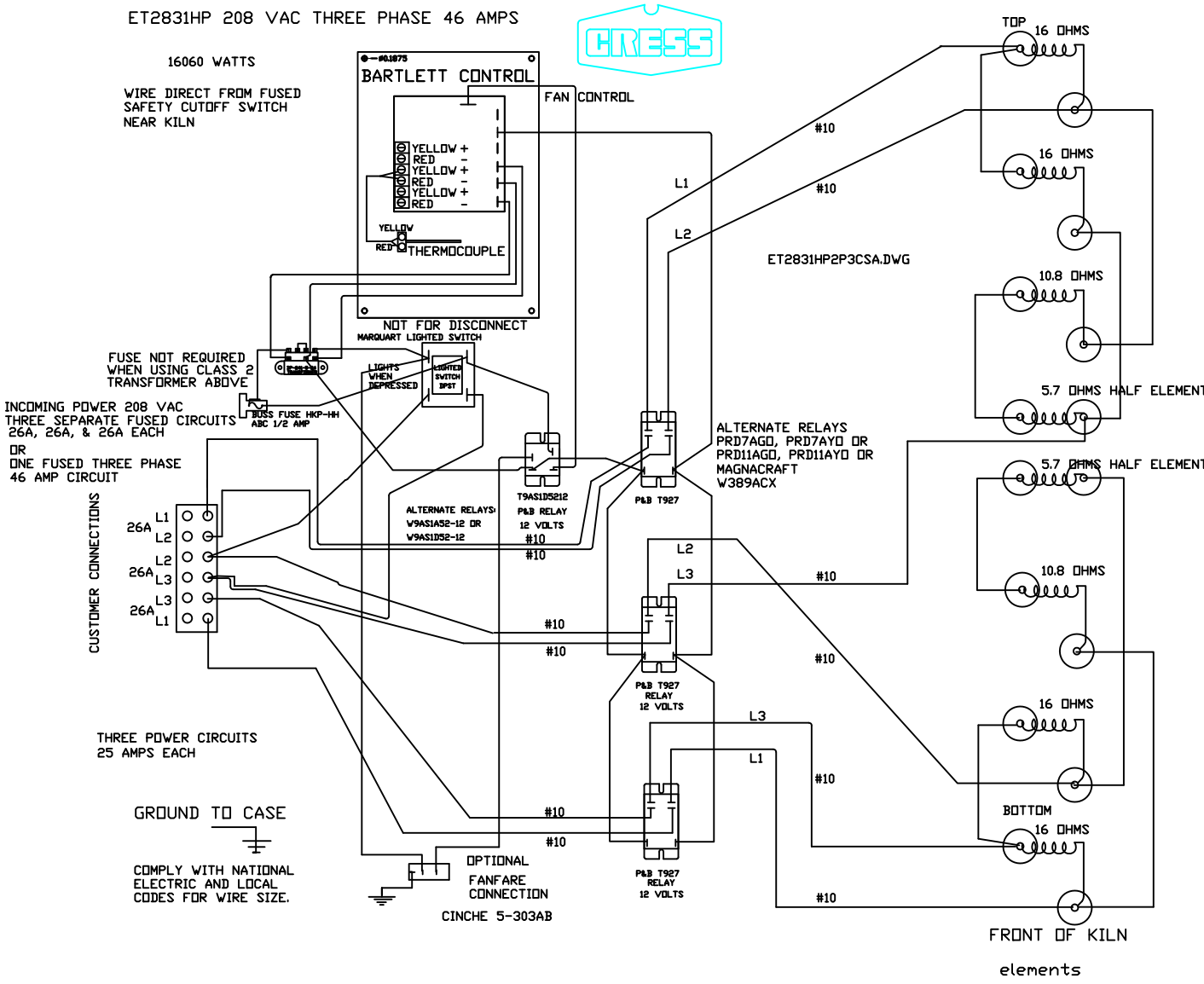
ET2831HP 208 VAC THREE PHASE 46 AMPS
16060 WATTS
WIRE DIRECT FROM FUSED SAFETY CUTOFF SWITCH NEAR KILN
BARTLETT CONTROL
FAN CONTROL
YELLOW +
RED -
YELLOW +
RED -
YELLOW +
RED -
YELLOW
RED
THERMOCOUPLE
NOT FOR DISCONNECT
MARQUART LIGHTED SWITCH
LIGHTS WHEN DEPRESSED
LIGHTED SWITCH DPST
FUSE NOT REQUIRED WHEN USING CLASS 2 TRANSFORMER ABOVE
INCOMING POWER 208 VAC THREE SEPARATE FUSED CIRCUITS 26A, 26A, & 26A EACH
OR
ONE FUSED THREE PHASE 46 AMP CIRCUIT
BUSS FUSE HKP-HH ABC 1/2 AMP
CUSTOMER CONNECTIONS
26A L1 L2
26A L2 L3
26A L3 L1
ALTERNATE RELAYS: W9AS1A52-12 OR W9AS1D52-12
T9AS1D5212 P&B RELAY 12 VOLTS
P&B T927
ALTERNATE RELAYS PRD7AGO, PRD7AYO OR PRD11AGO, PRD11AYO OR MAGNACRAFT W389ACX
P&B T927 RELAY 12 VOLTS
THREE POWER CIRCUITS 25 AMPS EACH
GROUND TO CASE
COMPLY WITH NATIONAL ELECTRIC AND LOCAL CODES FOR WIRE SIZE.
OPTIONAL FANFARE CONNECTION
CINCHE 5-303AB
L1
L2
L3
#10
ET2831HP2P3CSA.DWG
TOP
16 OHMS
10.8 OHMS
5.7 OHMS HALF ELEMENT
BOTTOM
FRONT OF KILN
elements