EC32FH

208-VOLT, SINGLE-PHASE 86-AMPS
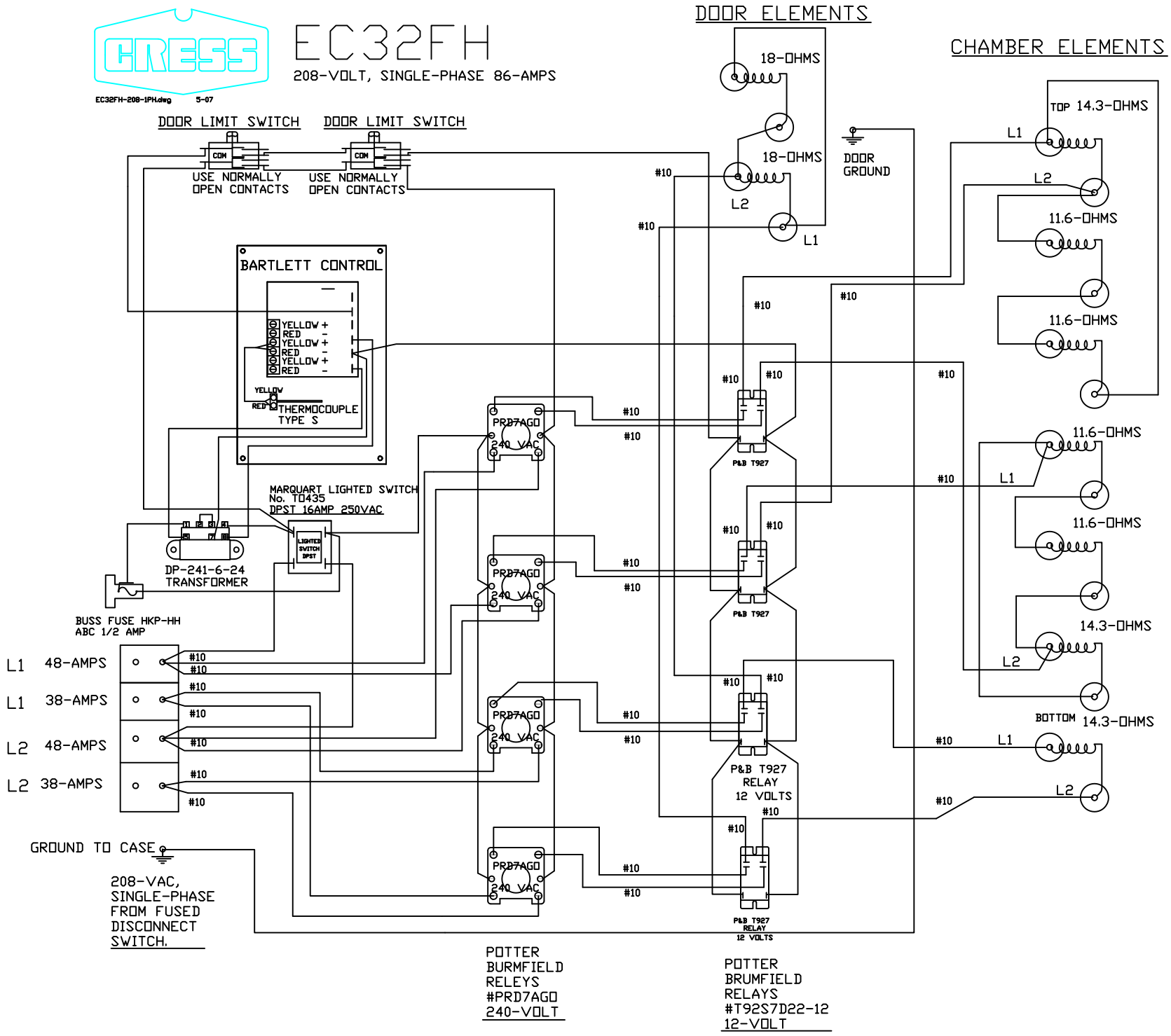
EC32FH-208-1PH.dwg 5-07