C-1632/935

208-Volt, Single Phase, 54-Amps

C1632-935-208-1PH.dwg

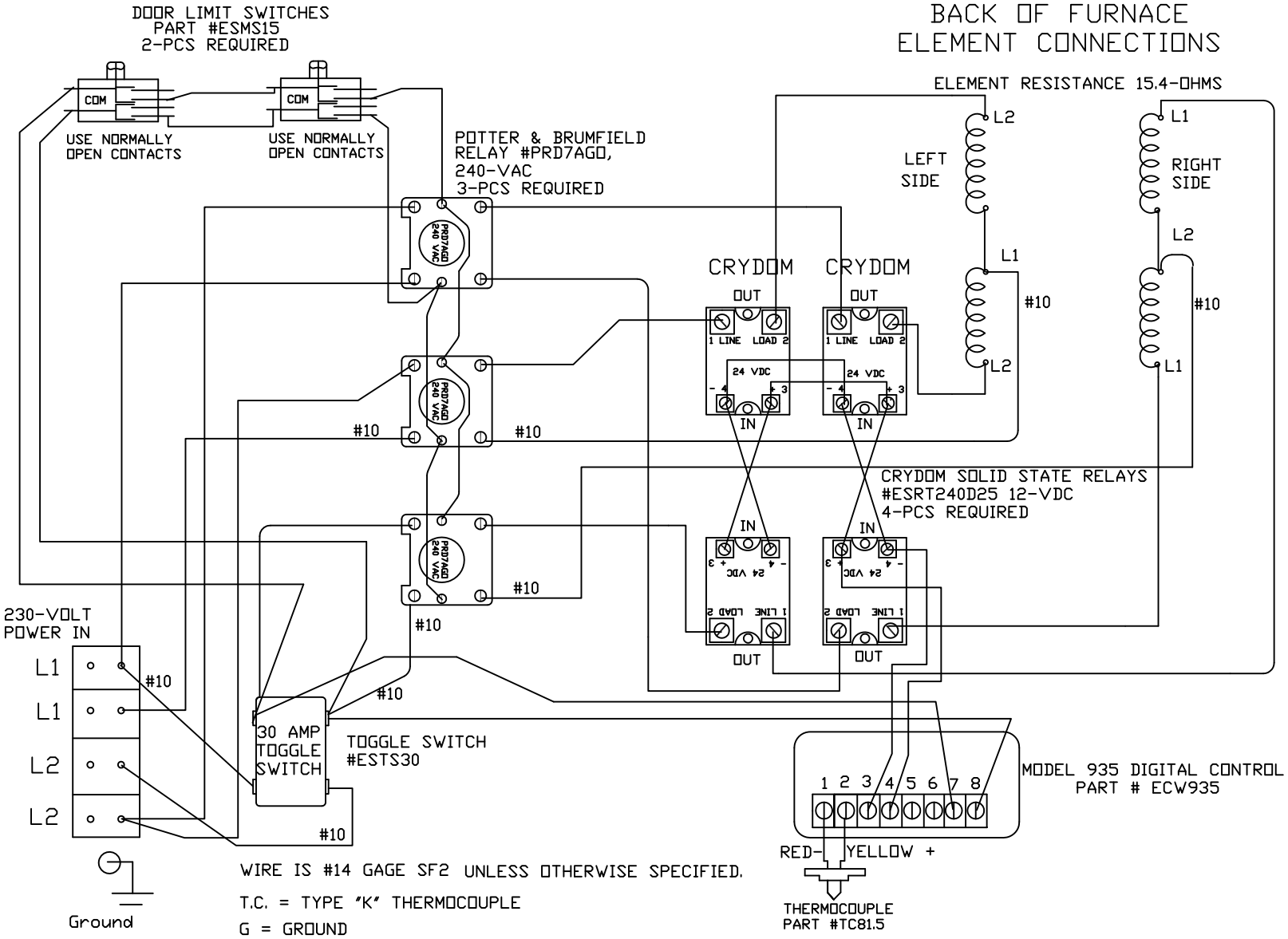

WIRE IS #14 GAGE SF2 UNLESS OTHERWISE SPECIFIED.

T.C. = TYPE "K" THERMOCOUPLE

G = GROUND