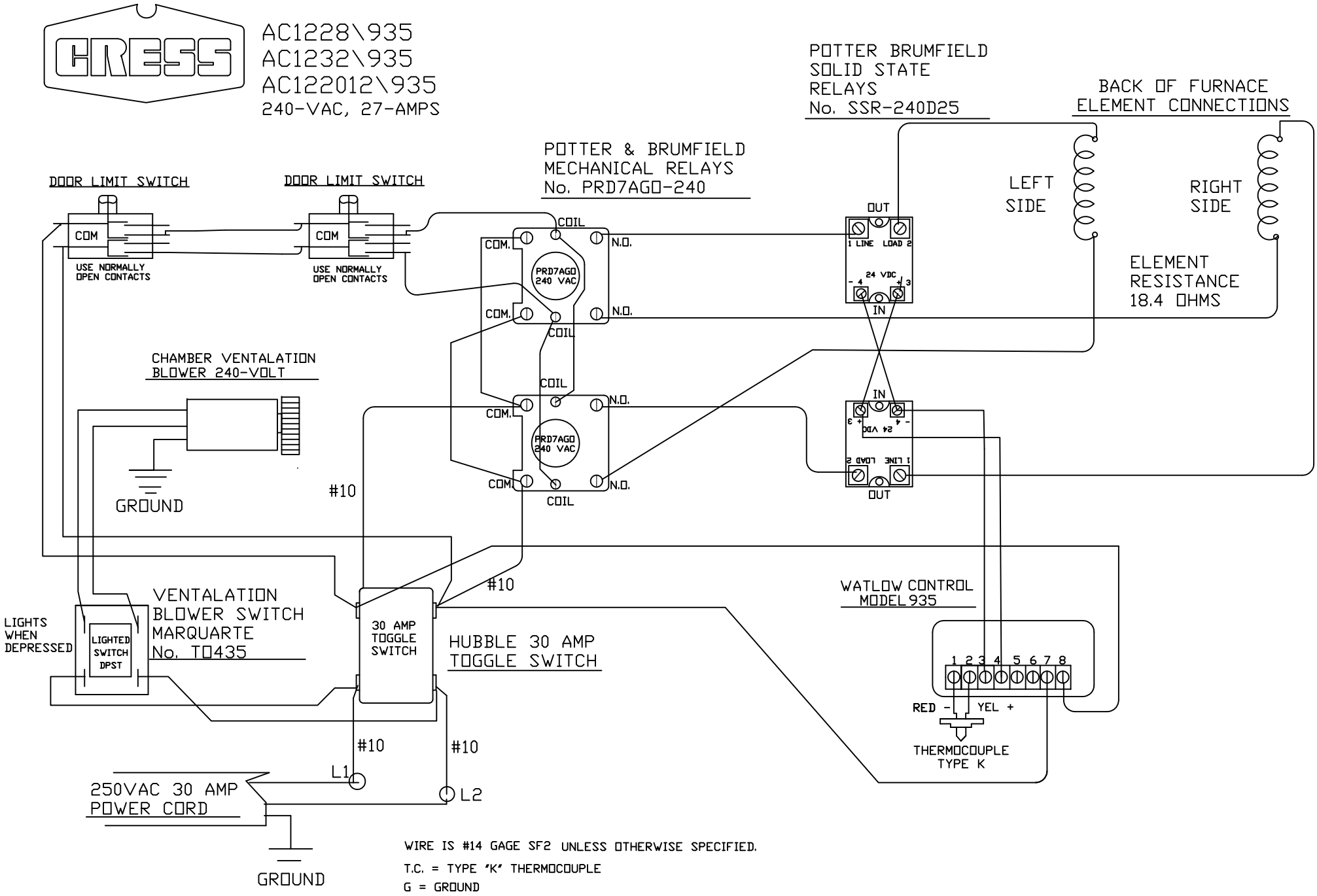
GRESS
AC1228\935
AC1232\935
AC122012\935
240-VAC, 27-AMPS
POTTER BRUMFIELD
SOLID STATE
RELAYS
No. SSR-240D25
BACK OF FURNACE
ELEMENT CONNECTIONS
POTTER & BRUMFIELD
MECHANICAL RELAYS
No. PRD7AGO-240
DOOR LIMIT SWITCH
COM
USE NORMALLY
OPEN CONTACTS
DOOR LIMIT SWITCH
COM
USE NORMALLY
OPEN CONTACTS
COIL
COM.
N.O.
PRD7AGO
240 VAC
COM.
N.O.
COIL
OUT
1 LINE
LOAD 2
24 VDC
- 4
+ 3
IN
LEFT
SIDE
RIGHT
SIDE
ELEMENT
RESISTANCE
18.4 OHMS
CHAMBER VENTALATION
BLOWER 240-VOLT
GROUND
COIL
COM.
N.O.
PRD7AGO
240 VAC
COM.
N.O.
COIL
IN
OUT
#10
#10
LIGHTS
WHEN
DEPRESSED
LIGHTED
SWITCH
DPST
VENTALATION
BLOWER SWITCH
MARQUARTE
No. T0435
30 AMP
TOGGLE
SWITCH
HUBBLE 30 AMP
TOGGLE SWITCH
WATLOW CONTROL
MODEL 935
1 2 3 4 5 6 7 8
RED -
YEL +
THERMOCOUPLE
TYPE K
#10
#10
L1
L2
250VAC 30 AMP
POWER CORD
GROUND
WIRE IS #14 GAGE SF2 UNLESS OTHERWISE SPECIFIED.
T.C. = TYPE "K" THERMOCOUPLE
G = GROUND