B23H 240 VOLTS 25 AMPS
5/98
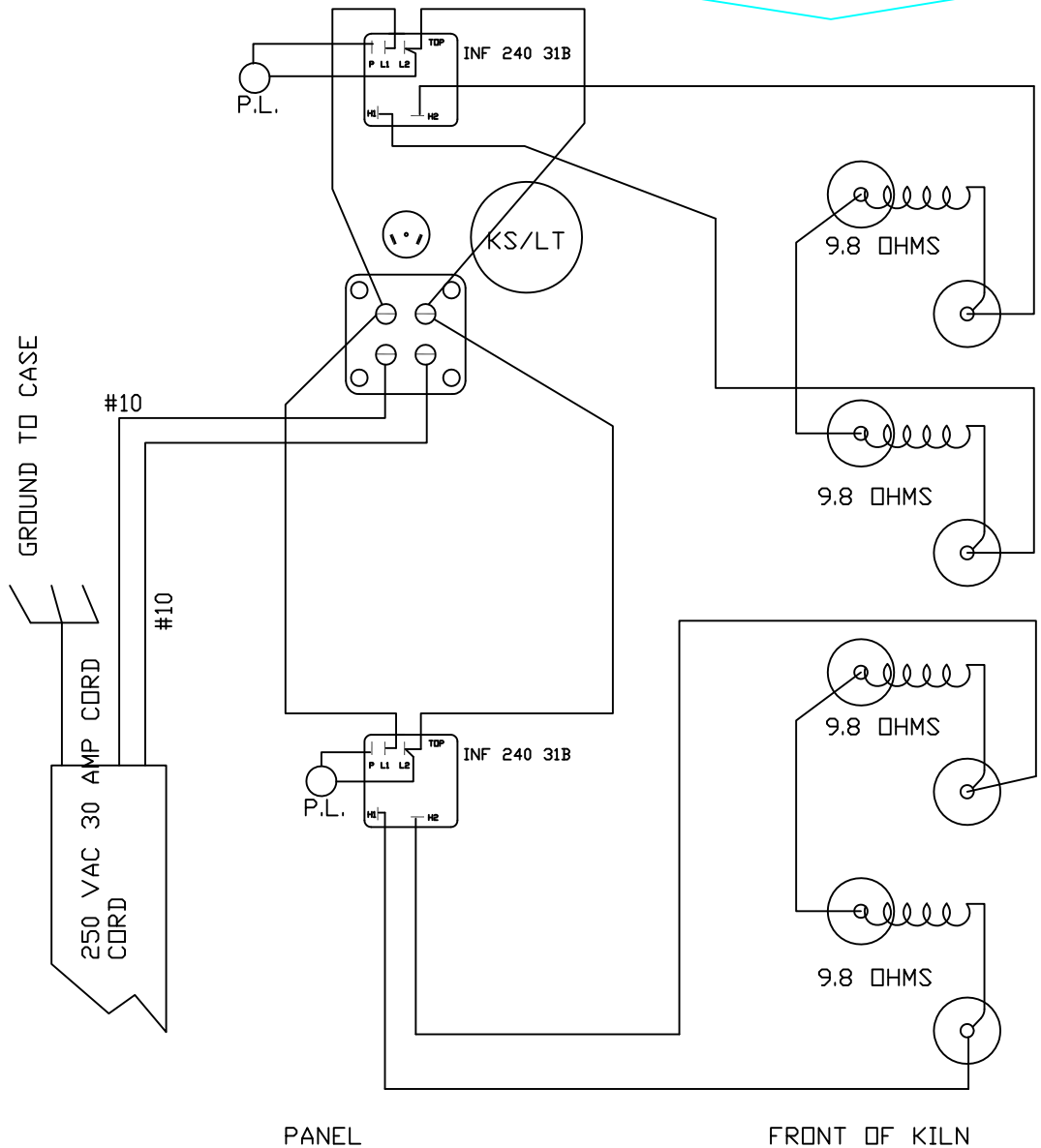
B23H.DWG