FXC30FH

208-VOLT, 3-PHASE,
CONE 10 OR 2400 F.

FXC30FH-208-3Ph-LV.DWG

6/2007

electrical panel
RIGHT SIDE OF KILN

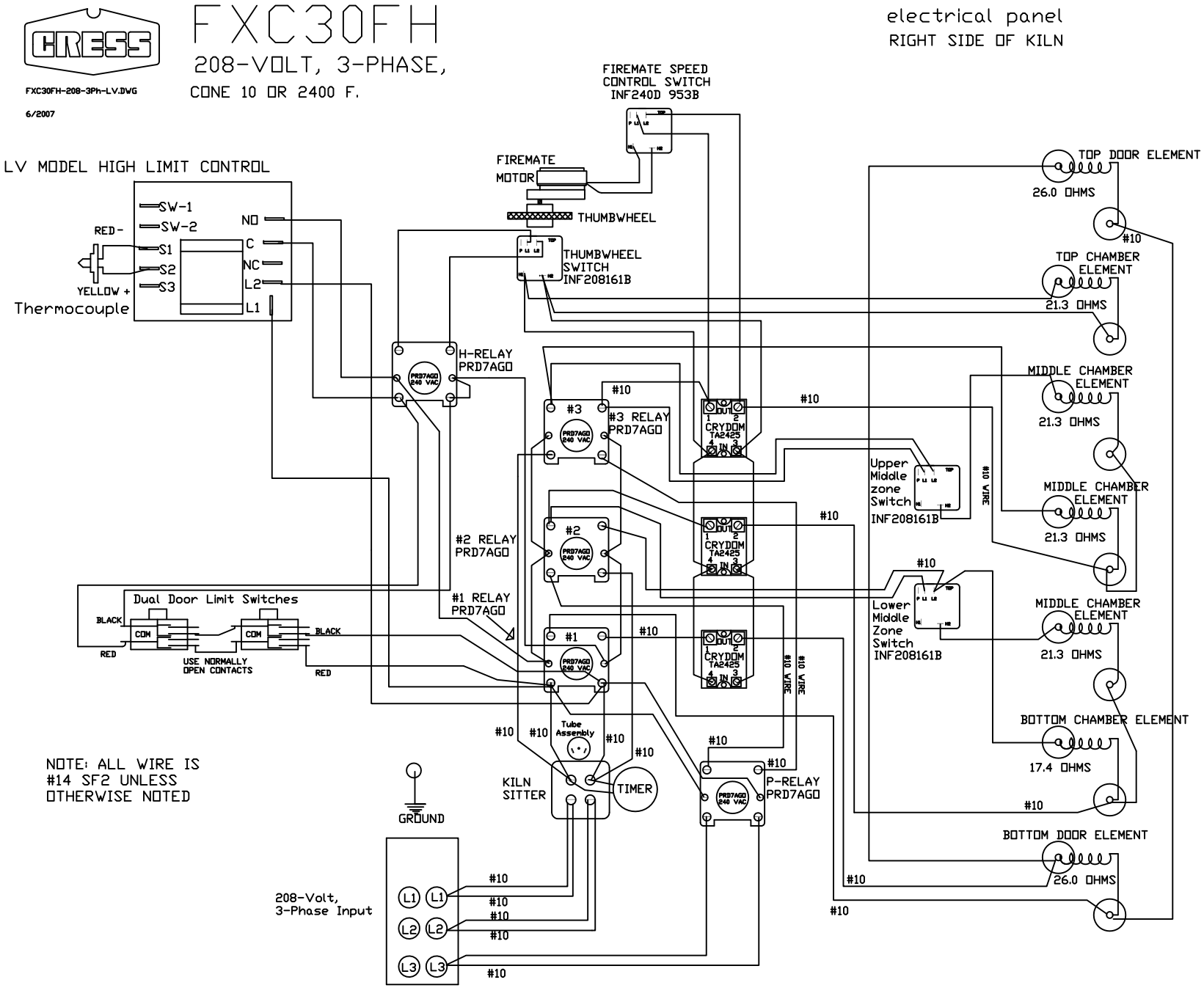

NOTE: ALL WIRE IS
#14 SF2 UNLESS
OTHERWISE NOTED