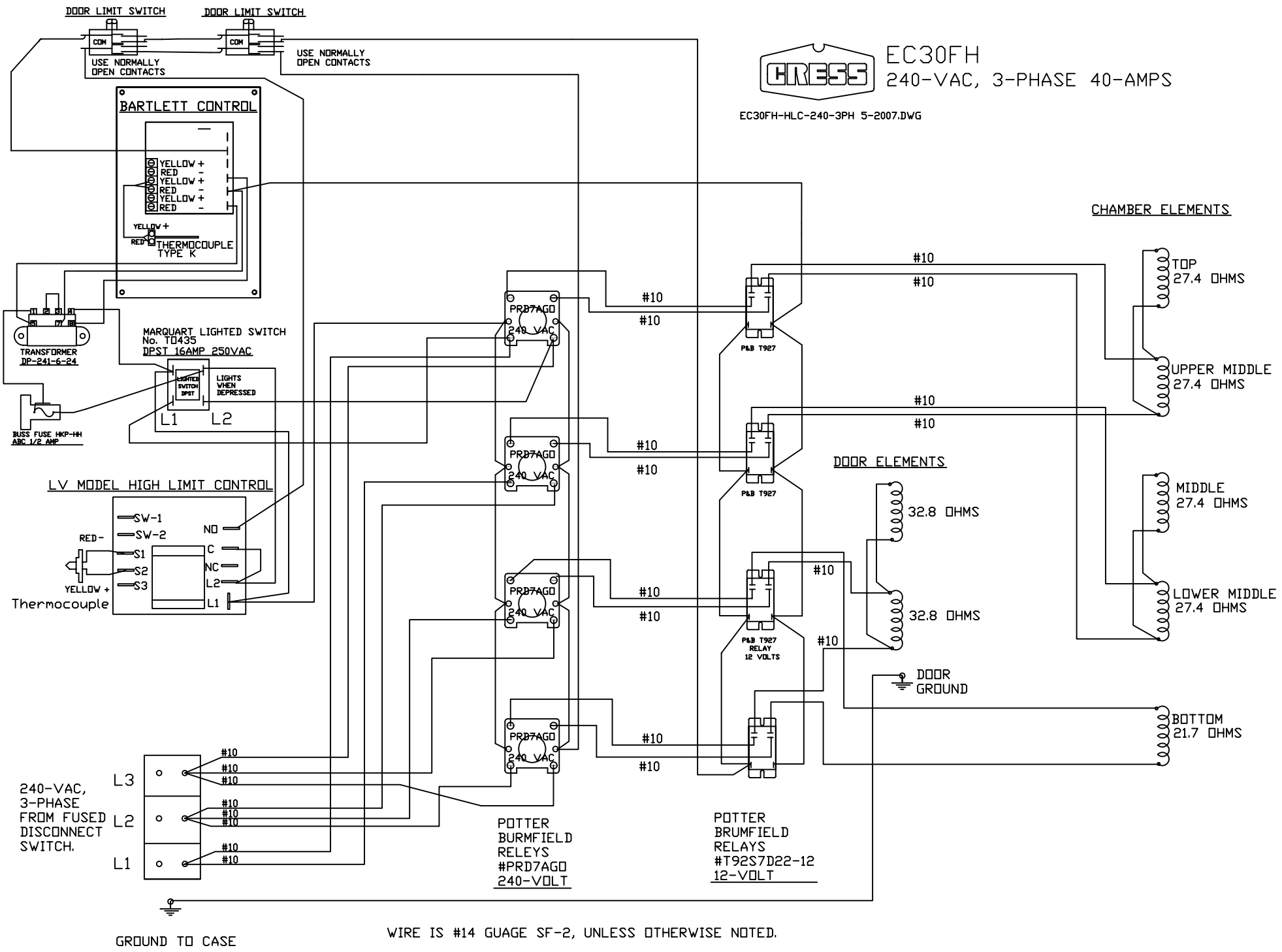
DOOR LIMIT SWITCH
DOOR LIMIT SWITCH
COM
COM
USE NORMALLY OPEN CONTACTS
USE NORMALLY OPEN CONTACTS
CRESS
EC30FH
240-VAC, 3-PHASE 40-AMPS
EC30FH-HLC-240-3PH 5-2007.DWG
BARTLETT CONTROL
YELLOW +
RED -
YELLOW +
RED -
YELLOW +
RED -
YELLOW +
RED
THERMOCOUPLE TYPE K
TRANSFORMER DP-241-6-24
BUSS FUSE HKP-HH ABC 1/2 AMP
MARQUART LIGHTED SWITCH No. T0435
DPST 16AMP 250VAC
LIGHTED SWITCH DPST
LIGHTS WHEN DEPRESSED
L1
L2
LV MODEL HIGH LIMIT CONTROL
SW-1
SW-2
RED-
S1
S2
S3
YELLOW +
Thermocouple
NO
C
NC
L2
L1
PRD7AGO
240 VAC
PRD7AGO
240 VAC
PRD7AGO
240 VAC
PRD7AGO
240 VAC
#10
P&B T927
P&B T927
P&B T927 RELAY 12 VOLTS
CHAMBER ELEMENTS
TOP 27.4 OHMS
UPPER MIDDLE 27.4 OHMS
MIDDLE 27.4 OHMS
LOWER MIDDLE 27.4 OHMS
BOTTOM 21.7 OHMS
DOOR ELEMENTS
32.8 OHMS
32.8 OHMS
DOOR GROUND
240-VAC, 3-PHASE FROM FUSED DISCONNECT SWITCH.
L3
L2
L1
POTTER BURMFIELD RELEYS #PRD7AGO 240-VOLT
POTTER BRUMFIELD RELAYS #T92S7D22-12 12-VOLT
GROUND TO CASE
WIRE IS #14 GUAGE SF-2, UNLESS OTHERWISE NOTED.