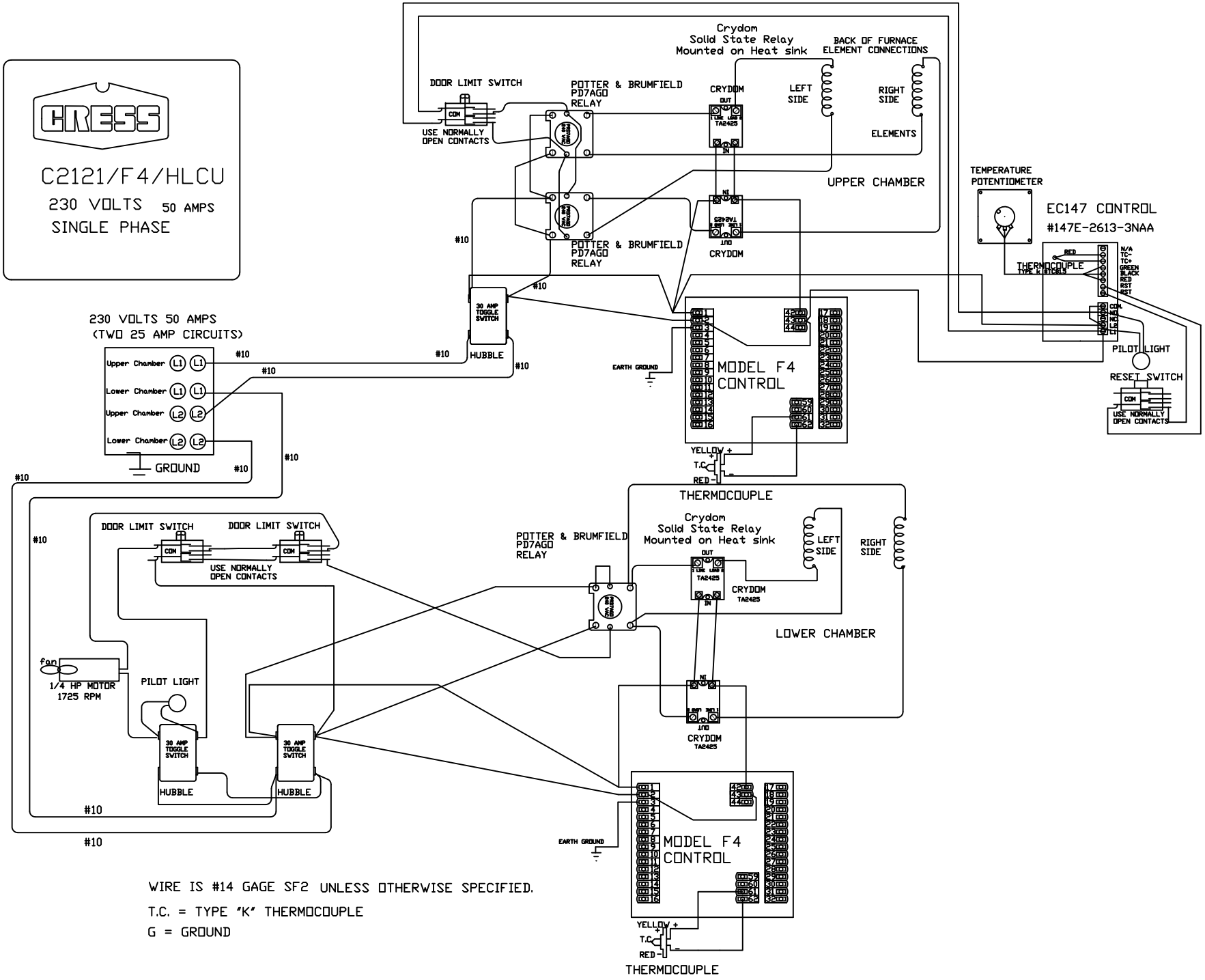
GRESS
C2121/F4/HLCU
230 VOLTS 50 AMPS
SINGLE PHASE
Crydom
Solid State Relay
Mounted on Heat sink
BACK OF FURNACE
ELEMENT CONNECTIONS
DOOR LIMIT SWITCH
POTTER & BRUMFIELD
PD7AGO
RELAY
CRYDOM
LEFT
SIDE
RIGHT
SIDE
ELEMENTS
USE NORMALLY
OPEN CONTACTS
UPPER CHAMBER
TEMPERATURE
POTENTIOMETER
EC147 CONTROL
#147E-2613-3NAA
THERMOCOUPLE
PILOT LIGHT
RESET SWITCH
USE NORMALLY
OPEN CONTACTS
30 AMP
TOGGLE
SWITCH
HUBBLE
#10
230 VOLTS 50 AMPS
(TWO 25 AMP CIRCUITS)
Upper Chamber
Lower Chamber
GROUND
EARTH GROUND
MODEL F4
CONTROL
YELLOW
T.C.
RED
THERMOCOUPLE
LOWER CHAMBER
fan
1/4 HP MOTOR
1725 RPM
PILOT LIGHT
WIRE IS #14 GAGE SF2 UNLESS OTHERWISE SPECIFIED.
T.C. = TYPE "K" THERMOCOUPLE
G = GROUND