C122412/935

480-VAC, 21-AMPS, SINGLE PHASE
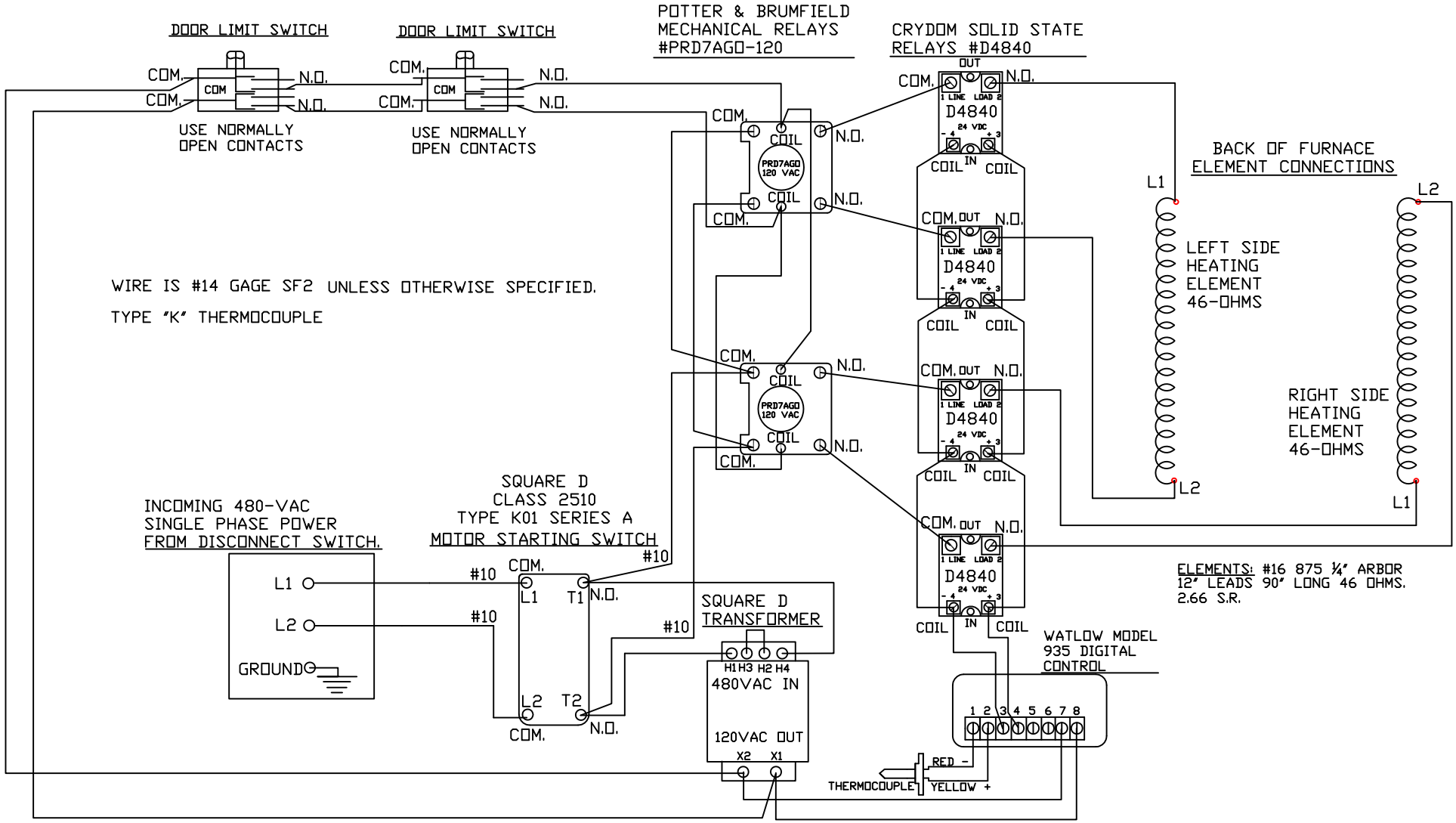
C122412-935-480-1p 9-07.dwg