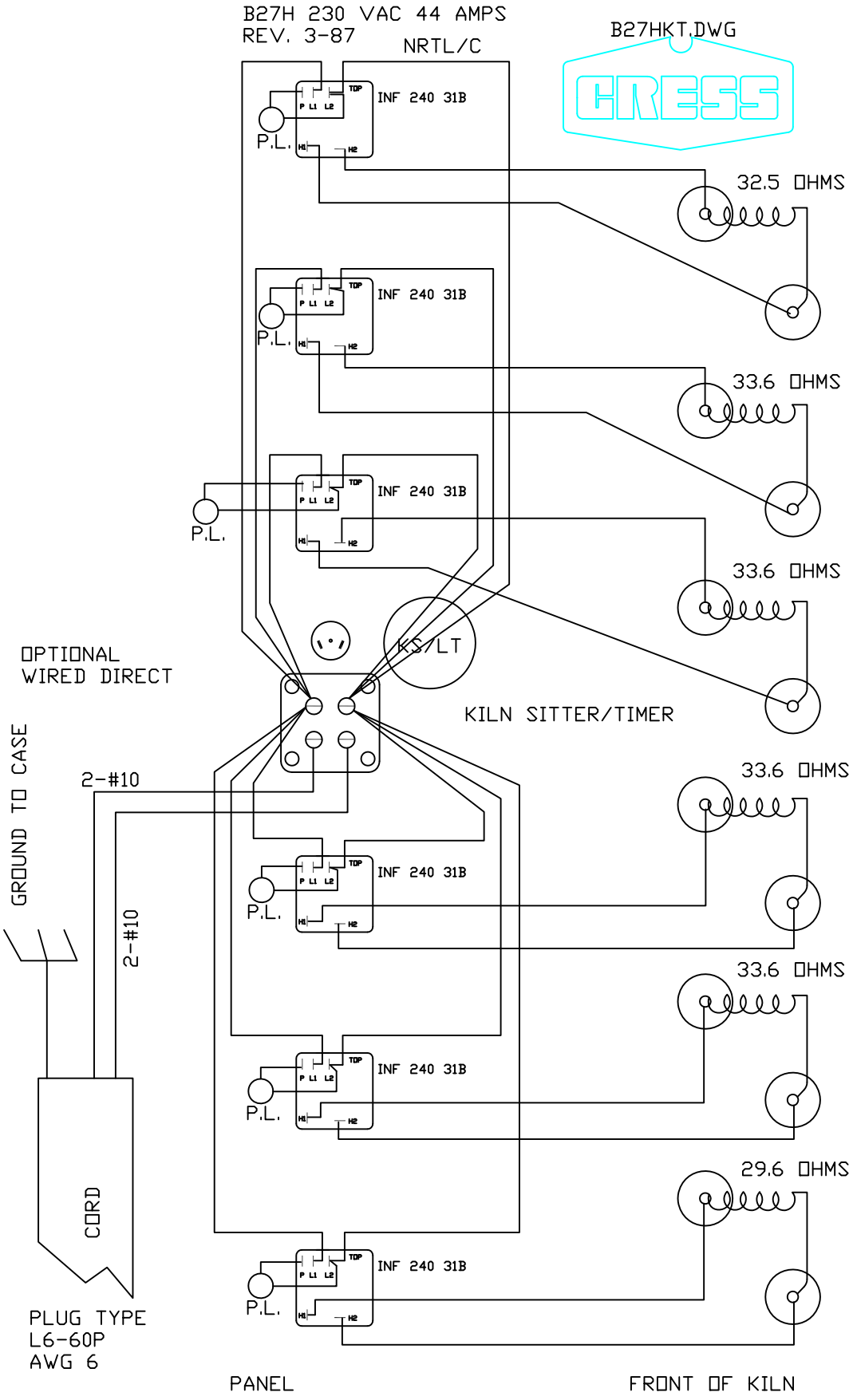
B27H 230 VAC 44 AMPS
REV. 3-87
NRTL/C
B27HKT.DWG
GRESS
INF 240 31B
P.L.
32.5 OHMS
33.6 OHMS
33.6 OHMS
33.6 OHMS
33.6 OHMS
29.6 OHMS
KS/LT
KILN SITTER/TIMER
OPTIONAL
WIRED DIRECT
GROUND TO CASE
2-#10
2-#10
CORD
PLUG TYPE
L6-60P
AWG 6
PANEL
FRONT OF KILN